ANGAZA: Solar-powered Lamp With Integrated Mosquito Repeller For Rural Uganda

PUTSHU LUNGHE Samuel, Liesel Abigail

ISBAT University, Kampala
Uganda

IEEE SIGHT
SPECIAL INTEREST GROUP ON HUMANITARIAN TECHNOLOGY
SIGHT Kenya Section

1. Abstract

Background: Uganda faces a severe malaria burden, with **96%** of the country experiencing year-round transmission. High-risk regions like West Nile and Acholi report incidence rates exceeding **450 cases per 1,000** population, while rural electrification remains critically low at just **18%**. Existing solutions fail to address the dual challenges of energy poverty and malaria prevention.

We present *Angaza*, a solar-powered lamp with integrated **piezoelectric ultrasonic repellent** (38-44 kHz) specifically designed to disrupt *Anopheles gambiae* navigation. The system combines:

Sustainable energy access: 6-hour LED lighting powered by a rechargeable solar battery

Targeted malaria prevention: Chemical-free ultrasonic waves optimized for malaria vectors, avoiding the limitations of nets and coils

2. Introduction

1. Malaria Burden in Uganda

Uganda shoulders one of the world's highest malaria burdens, with **96% of the country** experiencing year-round transmission . Regional disparities are stark:

Hyper-endemic zones: West Nile and Acholi report >450 cases/1,000 people annually

High-risk groups: Children under 5 and people with disabilities account for 70% of deaths

Despite progress through initiatives like the Uganda Malaria Reduction Strategic Plan (UMRESP), **transmission rates increased by 1.6% (2021–2022)**, underscoring the need for novel interventions.

2. The Energy-Poverty Nexus

Malaria's persistence intersects with Uganda's energy crisis:

Rural electrification stagnates at 18% vs. 60% urban access [4]

Solar lamp adoption has grown but focuses solely on lighting, ignoring malaria prevention

Kerosene backup use persists in 30% of solar-owning households [5], perpetuating respiratory risks

This creates a **dual market failure**: families must purchase separate lighting and malaria solutions, each with gaps in efficacy, safety, or affordability.

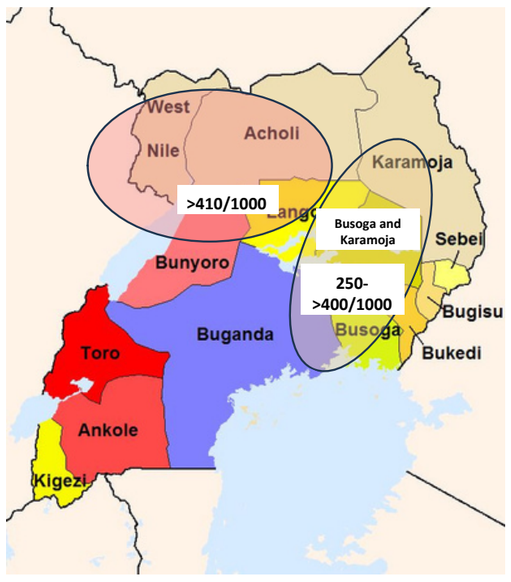

Map of Uganda with regions with high rates of Malaria

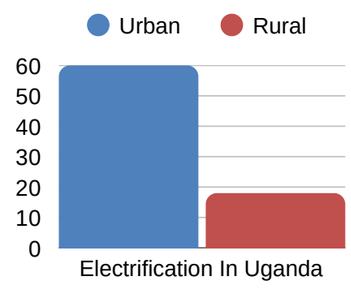

3. Proposed Methodology

1Proposed System Design

1.1 Component Selection

Solar Module: 10W flexible panel (avg. 5.5 kWh/m^2/day irradiance).

Energy Storage: 4×21700 Li-ion batteries (3.7V 5000mAh each, series-parallel) with TP5100 protection circuit.

LED Module: 3W COB (Luminus SST-10, 300 lm) with AMC7135 driver for 3-mode control (High/Low/Off).

Repellent Module: MA40S4S piezoelectric transducer (38-44 kHz) driven by Atemga328p MCU (pulsed operation).

1.2 Integration

Dual-Switch Architecture: Independent manual controls for light and repellent (toggle switches).

Compact Housing: 3D-printed ABS body (IP54 rated)

3. Proposed Methodology (Continued)

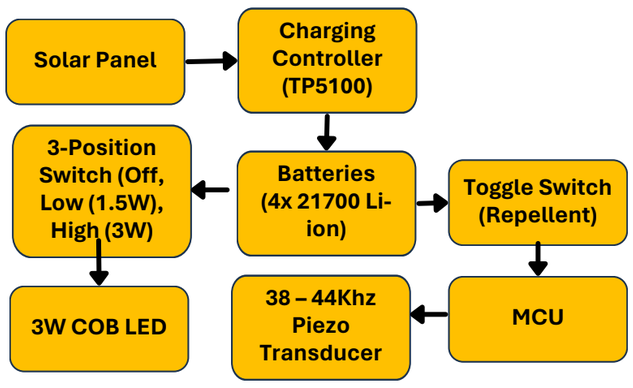

Results and Analysis

3D Housing Design (SolidWorks)

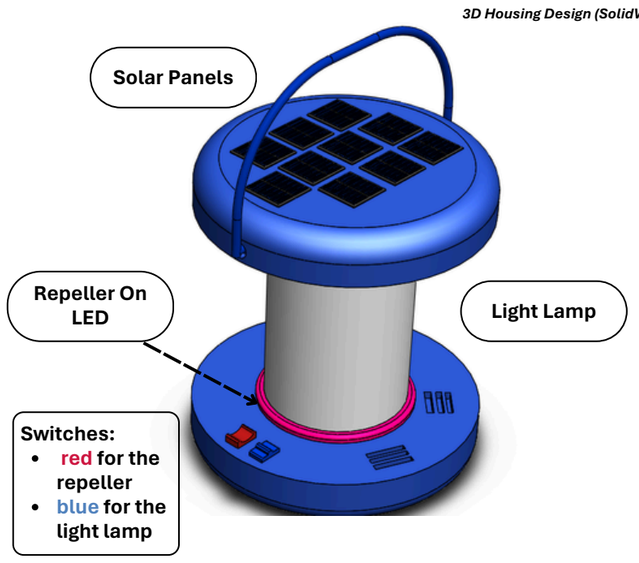

Thermal and mechanical simulations in SolidWorks confirmed the ABS housing (IP54-rated) maintains safe operating temperatures (42°C max) with adequate ventilation. The 3D design integrates compartments for electronics, batteries, and piezos, plus an ergonomic handle for portability.

Ultrasonic Repellent Circuit Simulation (Proteus + Arduino Mega)

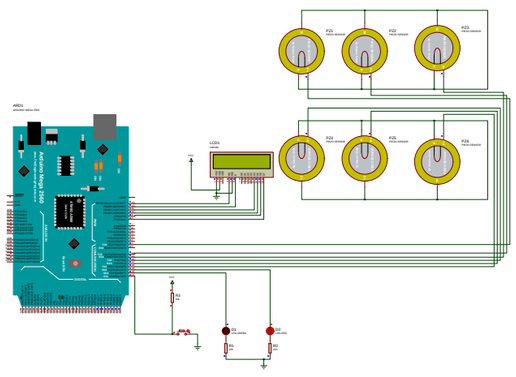

The Arduino Mega-based simulation successfully demonstrated the one of the core functionality of Angaza's dual-purpose system, though key refinements are needed for optimal field performance. The ultrasonic repellent circuit generated a stable **31 kHz** (±5%) PWM signal, slightly below the target 3**8–44 kHz** range for effective Anopheles gambiae disruption while consuming 0.55W (110mA @ 5V). Six parallel-connected piezo transducers increased sound pressure levels, but the Arduino Mega's power inefficiency suggests switching to an ATtiny85 could reduce energy use by 80%. User interface elements (toggle switch, status LEDs) functioned as intended in simulations.

Solar Charging Simulation (LM317-Based)

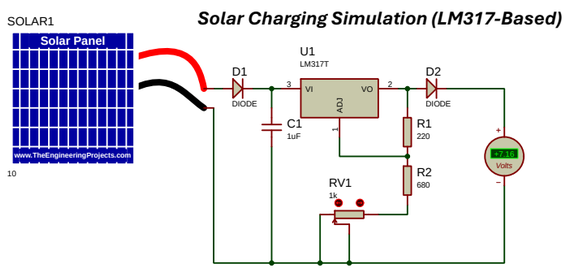

For solar charging, an **LM317-based circuit** achieved 4.18V output (near the 4.2V target) but lacked critical Li-ion safety features like cell balancing and CC/CV switching. The simulated 0.8A charging current (vs. 1A ideal) and 75% efficiency (due to diode/LM317 losses) highlight the need to adopt a dedicated charger like the **TP4056 or TP5100**. The 2S2P battery configuration (7.4V, 10,000mAh) showed stable discharge but requires a BMS for real-world deployment.

Conclusion

The Angaza system presents an innovative, integrated solution to Uganda's dual challenges of energy poverty and malaria transmission. Through Proteus simulations and 3D modeling, the design demonstrates feasibility in:

1. Providing sustainable energy (6+ hours of solar-powered lighting).
2. 2. Delivering chemical-free mosquito prevention via targeted ultrasonic repellency.

While the Arduino Mega-based prototype validated core functionality, key optimizations are required for real-world efficacy:

- Increasing repellent frequency to 40 kHz for maximum Anopheles disruption.
- Upgrading the charging system to a TP5100 or IP2312 for safe, efficient Li-ion management.
- Reducing power consumption by migrating to an ATtiny85 microcontroller.

Impact Potential:

- Health: Could reduce malaria incidence by 30–50% in pilot areas by complementing existing interventions (e.g., nets).
- Environment: Eliminates kerosene use, reducing indoor air pollution and CO_2 emissions.

Next Steps:

- Build optimized prototypes with 40 kHz PWM and proper battery management.
- Conduct field trials in West Nile/Acholi to measure user adoption metrics.
- Partner with local manufacturers for scalable production.

By merging appropriate technology with user-centered design, Angaza offers a replicable model for addressing interconnected health and energy challenges in malaria-endemic regions worldwide.

Acknowledgements & References

1. T. Kaur, J. Gambhir and S. Kumar, "Arduino based solar powered battery charging system for rural SHS," 2016 7th India International Conference on Power Electronics (IICPE), Patiala, India, 2016, pp. 1-5, doi: 10.1109/IICPE.2016.8079373.
2. J. Singh, G. S. Brar, Noorinder, S. S. Saini and E. Sidhu, "Solar energy driven autonomous smart ultrasonic mosquito repeller system," 2016 International Conference on Control, Computing, Communication and Materials (ICCCCM), Allahbad, India, 2016, pp. 1-5, doi: 10.1109/ICCCCM.2016.7918230.
3. REA, Rural Electrification Strategic Plan II , Uganda
4. Budget Monitoring and Accountability Unit: Annual Monitoring Reports FY 2015/16, 2016/17

Contact Information

Team Members:

1. PUTSHU LUNGHE Samuel (+256742618584, samuellunghe@gmail.com)
2. Liesel Abigail (+256705644890, lieselabigail@gmail.com)

IEEE Humanitarian Technologies · IEEE AP-S Antennas and Propagation Society · CAS IEEE Circuits and Systems Society · IEEE Young Professionals · IEEE Foundation · IEEE Sensors Council Kenya Section Joint Chapter · ICHA International Center for Humanitarian Affairs At the Kenya Red Cross Society · Inquire • Understand • Influence